IOPscience iopscience.iop.org

Home Search Collections Journals About Contact us My IOPscience

# Glassy behaviour in a two-dimensional lattice gas model with asymmetric particles

This article has been downloaded from IOPscience. Please scroll down to see the full text article.

2002 J. Phys.: Condens. Matter 14 1539

(http://iopscience.iop.org/0953-8984/14/7/311)

View the table of contents for this issue, or go to the journal homepage for more

Download details:
IP Address: 171.66.16.27
The article was downloaded on 17/05/2010 at 06:10

Please note that terms and conditions apply.

INSTITUTE OF PHYSICS PUBLISHING JOURNAL OF PHYSICS: CONDENSED MATTER

J. Phys.: Condens. Matter **14** (2002) 1539–1547 PII: S0953-8984(02)32094-0

# Glassy behaviour in a two-dimensional lattice gas model with asymmetric particles

**A Díaz-Sánchez[1,2,3], Antonio de Candia[1,2] and Antonio Coniglio[1,2]**

[1] Dipartamento di Scienze Fisiche, Universitá di Napoli 'Federico II', Complesso Universitario di Monte Sant'Angelo, Via Cintia, I-80126 Napoli, Italy
[2] INFM, Unitá di Napoli, Napoli, Italy
[3] Departamento de Física Aplicada, Universidad Politécnica de Cartagena, Campus Muralla del Mar, Cartagena, E-30202 Murcia, Spain

E-mail: andiaz@upct.es

Received 21 December 2001
Published 7 February 2002
Online at stacks.iop.org/JPhysCM/14/1539

**Abstract**
We study the relaxation process in a two-dimensional lattice gas model, where the interactions arise from the excluded volume. In this model particles have three arms with an asymmetric shape, which results in geometric frustration that inhibits full packing. A dynamical crossover is found at the arm percolation of the particles, from a dynamical behaviour characterized by a single step relaxation above the transition, to a two-step decay below it. Relaxation functions of the self-part of density fluctuations are well fitted by a stretched exponential form, with a $\beta$ exponent decreasing when the temperature is lowered until the percolation transition is reached, and constant below it. The dynamical nonlinear susceptibility, defined as the fluctuation of the self-overlap autocorrelation, exhibits a peak at some characteristic time, which seems to diverge at the maximum density as well.

## 1. Introduction

Most glassy systems such as structural glasses, ionic conductors, supercooled liquids, polymers, colloids and spin glasses have similar complex dynamical behaviour. As the temperature is lowered the relaxation times increase drastically, and the relaxation functions deviate strongly from a single-exponential function at some temperature $T^*$ well above the dynamical transition. In the long-time regime they can be well fitted by a stretched exponential or Kohlrausch–Williams–Watts [1] function $f(t) = f_0 \exp[-(t/\tau)^\beta]$, with $0 < \beta \leqslant 1$.

There are two mechanism driving nonexponential relaxation. In disordered models such as spin glasses, it is caused by the existence of unfrustrated ferromagnetic-type clusters of interactions [2], and therefore is a direct consequence of the quenched disorder [3]. Another mechanism in frustrated systems is based on the percolation transition of the Kasteleyn–Fortuin

and Coniglio–Klein cluster [4]. In this approach disorder is not needed to obtain nonexponential relaxation [5].

In glass forming liquids it seems that there is no sharp thermodynamic transition, and no diverging static length. However, numerical studies have identified long-lived dynamical structures that are characterized by a typical length and a typical relaxation time, which depend on temperature and density [6]. In order to characterize this behaviour a dynamical nonlinear susceptibility was introduced by Donati *et al* [7], both for spin models and for structural glasses. They found that the dynamical susceptibility exhibits a maximum at some characteristic time, which diverges as the dynamical transition temperature is approached from above.

The understanding of the macroscopic process of relaxation in structural glasses, starting from the microscopic motion of the particles, has been approached using different microscopic models, for example the hard-square model [10], kinetically constrained models [11, 12] and the frustrated Ising lattice gas model [8, 9]. These models have reproduced some aspects of the glassy phenomenology. In this paper we consider a two-dimensional geometric model, which contains as its main ingredient only geometric frustration without quenched disorder and without kinetic constraints, as quenched disorder is not appropriate for studying structural glasses and kinetic constraints are to a certain extent artificial. Similar models have already been proposed [8] and applied to the study of granular materials [13].

In section 2 we recall briefly the main results of the mode coupling theory (MCT) for supercooled liquids. In section 3 we present the model and in section 4 we study its percolation properties. In section 5 we show the dynamical results, and finally in section 6 we present our conclusions.

## 2. Mode coupling theory

In this section we briefly present the main results of the ideal MCT for supercooled liquids [14] in order to compare the dynamical behaviour of our model with the predictions of this theory. The MCT predicts the existence of a dynamical transition at $T_{\mathrm{MCT}}$ from an ergodic to a nonergodic phase, which is the ideal glass transition. The spatial Fourier transform of the density–density autocorrelation function, $F_k(t)$, vanishes at long time in the liquid phase $T > T_{\mathrm{MCT}}$, but exhibits a plateau when plotted versus the logarithm of time. The time range over which the plateau is observed increases rapidly when the temperature approaches $T_{\mathrm{MCT}}$ from above and extends up to $t = \infty$ at $T = T_{\mathrm{MCT}}$. Below $T = T_{\mathrm{MCT}}$ the system becomes nonergodic, since $F_k(t)$ no longer decays to zero (glass phase).

In this scenario there are two timescales that diverge as the critical point is approached from above, the one corresponding to the $\beta$-relaxation $t_\sigma \propto |\sigma|^{-\delta}$ and the one corresponding to the $\alpha$-relaxation $\tau_\alpha \propto |\sigma|^{-\gamma}$. $\sigma$ is proportional to $x - x_{\mathrm{c}}$, where $x$ is the external control parameter (density or temperature) and $x_{\mathrm{c}}$ is the critical value. A first scaling regime is found for intermediate times, the so-called $\beta$-relaxation, where the correlators can be written as

$$F_k(t) = f_k^c + h_k c_\sigma g_\pm(t/t_\sigma) \qquad \text{for } t_0 \ll t \ll \tau_\alpha \tag{1}$$

where $c_\sigma = \sqrt{|\sigma|}$ and $\pm$ refers, respectively, to the glass and liquid phases. At short times, $t_0 \ll t \ll t_\sigma$, $g_\pm(t/t_\sigma) = (t/t_\sigma)^{-a}$ while for longer times, $t_\sigma \ll t \ll \tau_\alpha$, $g(t)$ is a constant in the glass phase and follows a von Schweidler law, $g_-(t/t_\sigma) = -B(t/t_\sigma)^b$, in the liquid phase. The amplitude factor $h_k$ depends on the particular correlator, but not on the external control parameter. The exponents $a$ and $b$ are connected by the transcendental equation

$$\frac{\Gamma^2(1-a)}{\Gamma(1-2a)} = \frac{\Gamma^2(1+b)}{\Gamma(1+2b)} = \lambda \tag{2}$$

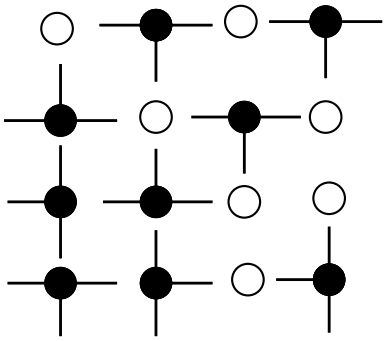

**Figure 1.** Schematic picture of one particular configuration in a system size of $4^2$ and density $\rho = 9/16$.

where $0 < a < 0.5$ and $0 < b \leqslant 1$; $\lambda$ is the exponent parameter, which is determined by the structure factor.

Furthermore, a second scaling regime is found for the $\alpha$-relaxation ($t \gg \tau_\alpha$) in the liquid phase, which follows the master equation

$$F_k(t) = \overline{F}_k(t/\tau_\alpha) \tag{3}$$

where $\overline{F}_k(t/\tau_\alpha)$ is well fitted by a stretched exponential function with $0 < \beta \leqslant 1$ and depends on the particular correlator, but not on the external control parameter.

The diffusion constant shows the critical behaviour $D \propto |\sigma|^\gamma$, with

$$\gamma = \frac{1}{2a} + \frac{1}{2b}. \tag{4}$$

The exponent $\gamma$ is the same as that which gives the divergence of the $\alpha$-relaxation time, $\tau_\alpha \propto |\sigma|^{-\gamma}$.

## 3. The model

In this paper we introduce a model which can be considered as an illustration of the concept of frustration arising as a packing problem. In systems without underlying crystalline order, frustration is typically generated by the geometric shape of the molecules, which prevents the formation of close-packed configurations at low temperature or high density; for systems with underlying crystalline order, frustration arises when the local arrangement of molecules kinetically prevents all the molecules from reaching the crystalline state.

An example of a glass-former that has difficulty in achieving crystalline order is *ortho*-terphenyl, a molecule made of three rings. This system can be loosely modelled with a simple lattice model, in which 'T'-shaped objects occupy the vertices of a square lattice with one of four possible orientations.

Assuming that the arms cannot overlap due to excluded volume, we see that two particles can occupy nearest-neighbour vertices only for some relative orientations. Consequently, depending on the local arrangement of particles, there are sites on the lattice that cannot be occupied (see figure 1). This type of 'packing' frustration thus induces defects or holes in the system. This model resembles the hard-square lattice gas model [10], which can be seen as '+'-shaped objects on the vertices of a square lattice with excluded volume interaction. A very important difference between these two models is the internal degree of freedom due to the particle shape, which is absent from the latter.

We consider a two-dimensional square lattice and impose periodic boundary conditions. In our system the maximum density is $\rho_{\max} = 2/3$, at which all possible bonds are occupied by an arm. A configuration of density $\rho_{\max}$ is a ground state of the system, corresponding to chemical potential $\mu \to \infty$ or temperature $T \to 0$. It can be obtained for any size by constructing larger systems from smaller ones with $\rho_{\max}$, using appropriate boundary conditions. In this way one can build an extensive number of different ground states that lack spatial order.

We have simulated the diffusion and rotation dynamics of this model by Monte Carlo methods. The dynamics of the particles is given by the following algorithm:

(i) pick a particle at random;
(ii) pick a site at random between the four nearest-neighbour sites;
(iii) choose randomly an orientation of the particle;
(iv) move the particle into the given site with the given orientation if this does not cause two arms to overlap;
(v) if such a diffusion move is not possible, choose a random orientation and try to rotate the particle to this new orientation;
(vi) advance the clock by $1/N_s$, where $N_s$ is the number of sites, and go to (i).

## 4. Percolation transition

In order to investigate whether the percolation transition has effects on the dynamics, we analyse in this section the percolation properties of the model, and relate the percolation density to a change in the dynamical properties of the model. The particles have three arms, and there are two bonds per site on the lattice, so the density of bonds occupied by an arm is given by $\sigma = 3\rho/2$, where $\rho$ is the density of particles. Therefore, if the correlations of the arms were not important, the arm percolation would occur at the density $\sigma_c = 1/2$, corresponding to $\rho_c = 1/3$. However, we do expect some correlation effects.

We have simulated our system for various lattice sizes around the percolation density in order to determine $\rho_c$. For each density we have reached equilibrium and then, taking $10^4$ steps, we have evaluated the probability of existence of a spanning cluster $P$ and the mean cluster size $S = \sum_s s^2 n_s$, where $n_s$ is the density of finite clusters of size $s$.

Around the percolation density the averaged quantities $P(\rho)$ and $S(\rho)$, for different values of the lattice size $L$, should obey the finite-size scaling [15]

$$P(\rho) = F_P[L^{1/\nu}(\rho - \rho_c)] \tag{5}$$

$$S(\rho) = L^{\gamma/\nu} F_S[L^{1/\nu}(\rho - \rho_c)] \tag{6}$$

where $\gamma$ and $\nu$ are the critical exponents, and $F_P(x)$ and $F_S(x)$ are universal functions of a adimensionless quantity $x$. Figure 2 shows the finite-size scaling of $P$ and $S$. We have selected the values of the exponent corresponding to the two-dimensional site-bond percolation universality class [15], that is $\nu = 4/3$ and $\gamma = 43/18$ and found $\rho_c = 0.315 \pm 0.003$. We see that the arm correlations and the thermal fluctuations decrease the critical density with respect to the random bond problem.

## 5. Dynamical results

We now wish to define a self-overlap parameter, in order to measure the autocorrelation of the model. Different definitions of $q$ can be used, and the form of the relaxation functions is different for different overlap parameters. Here we define a self-overlap parameter which takes into account the orientation of the particle, rather than just its position. The orientation

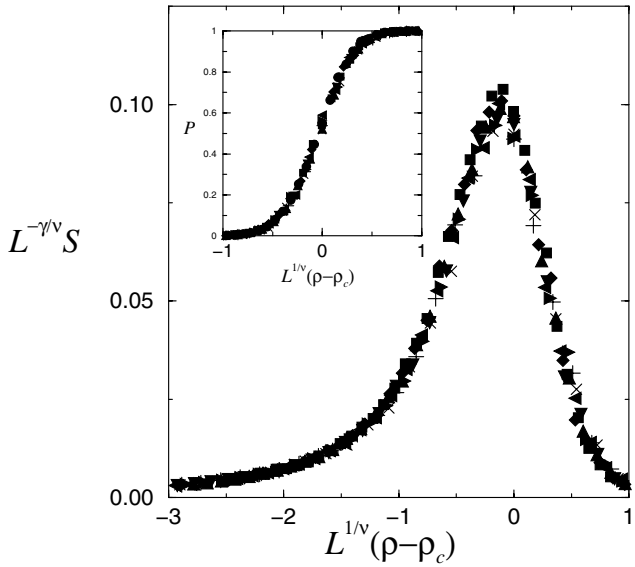


**Figure 2.** Finite-size scaling of $P(\rho)$ (inset) and $S(\rho)$ for lattice sizes $L = 40, 50, 60, 70, 80, 90, 100, 110$ and 120.

of the particle is defined by the discrete values of the angle $\phi_i = 0, \pi/2, \pi$ or $3\pi/2$, and we define the self-overlap

$$q(t) = \frac{1}{N}\sum_i n_i(t')n_i(t'+t)\cos[\phi_i(t'+t) - \phi_i(t')] \tag{7}$$

where $n_i(t) = 0, 1$ is the occupation number of site $i$ at time $t$, $\phi_i(t)$ is the orientation of the particle on site $i$ at time $t$ and $N$ is the number of sites. This parameter is a generalization of the self-overlap defined in [9], where the orientation $\phi_i$ plays the role of the spin variables. When all particles are frozen $q = 1$. The associated dynamical nonlinear susceptibility $\chi(t)$ is given by

$$\chi(t) = N[\langle q(t)^2\rangle - \langle q(t)\rangle^2] \tag{8}$$

where the average $\langle\cdots\rangle$ is performed over the reference time $t'$.

In figure 3 we show the relaxation function of the self-overlap parameter, for a system of size $64^2$ and densities between $\rho = 0.2$ and 0.66. Each curve is obtained by averaging over a time interval for $t'$ of $10^4$ to $10^8$ Monte Carlo steps, depending on the density. For high and intermediate densities we observe a two-step relaxation function, showing the existence of two well separate timescales in the system. The initial short-time decay of the relaxation functions is due to the rotations of the particles in an environment which appears as quenched on this timescale, while the second decay is due to the evolution of the environment and the final relaxation to equilibrium.

For very low densities $\rho \leqslant 0.1$ the relaxation function is well fitted by an exponential form. From $\rho \approx 0.1$ to $\rho \approx \rho_c$ we can fit the relaxation function by a stretched exponential form, with the exponent $\beta$ decreasing slowly towards $\beta \approx 0.9$ at $\rho \approx \rho_c$. For higher values of densities it is impossible to fit the relaxation function with a single form over the whole time interval. This suggests that the percolation transition induces a crossover in the dynamics, from a single relaxation regime to two temporal scales for the relaxation of the particles. At densities higher than $\rho \approx \rho_c$, the long-time tail of the relaxation functions is well fitted by a

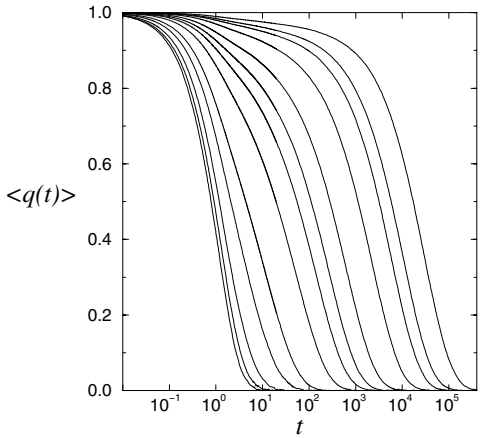


**Figure 3.** Relaxation functions for the self-overlap for system size $64^2$ and densities $\rho = 0.2$, 0.3, 0.4, 0.5, 0.55, 0.6, 0.62, 0.63, 0.64, 0.65, 0.655, 0.657 and 0.66.

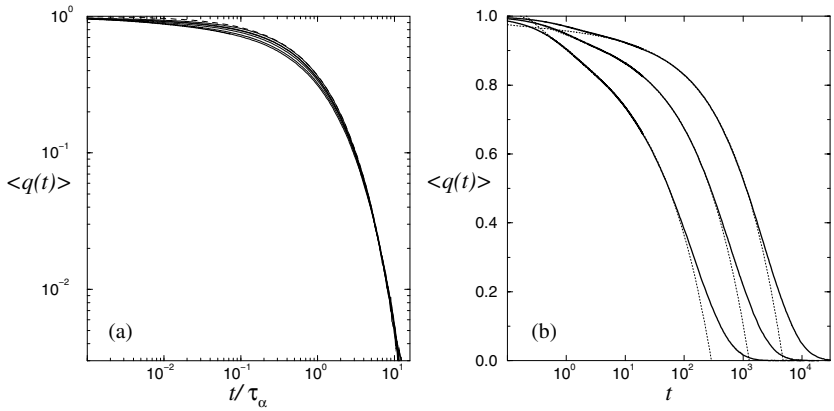


**Figure 4.** (a) Time–density superposition principle for the relaxation function of the self-overlap, for densities $\rho = 0.62$, 0.63, 0.64, 0.65, 0.655, 0.657 and 0.66. The dashed curve is a fitting function corresponding to a stretched exponential form with exponent $\beta = 0.71$. (b) Fit of the intermediate-time regime of the relaxation functions of the self-overlap, for densities $\rho = 0.62$, 0.64 and 0.65. The fitting function is $f + At^{-a} - Bt^b$ (dotted curve), where the fitting parameters are $f$, $A$, $B$ and $\lambda$, and $a$ and $b$ are given by relation (2).

stretched exponential form, where the exponent $\beta$ depends very weakly on the density (it is constant within the errors) and lies in the range $\beta = 0.64$–0.71. We show in figure 4(a) the time–density superposition of the relaxation function $\langle q(t)\rangle$, for densities between $\rho = 0.62$ and 0.66. Also shown, as a dashed curve, is a fit with a stretched exponential function.

In figure 4(b) we show the intermediate-time behaviour of the self-overlap relaxation functions, for densities $\rho = 0.62$, 0.64 and 0.65. We have tried to fit them with the simplified form of the function predicted by the MCT,

$$\langle q(t)\rangle = f + At^{-a} - Bt^b \tag{9}$$

where the fitting parameters are $f$, $A$, $B$ and $\lambda$, while $a$ and $b$ are related to $\lambda$ by equation (2). The values of $\lambda$ obtained from the fits are constant within the errors, with a mean value $\lambda = 0.785 \pm 0.005$, which corresponds to exponents $a = 0.285 \pm 0.005$ and $b = 0.50 \pm 0.01$.

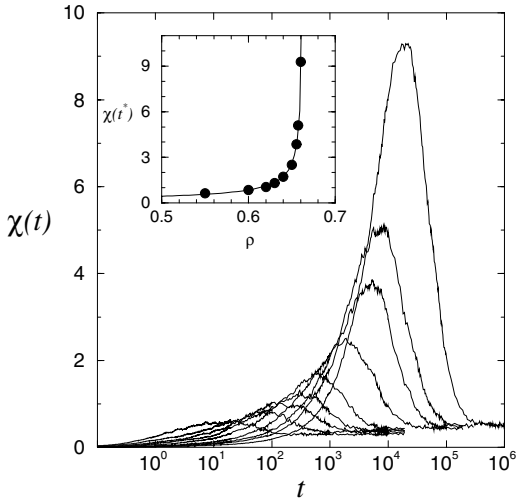


**Figure 5.** Dynamical susceptibility for $L = 64$ and densities $\rho = 0.6$, 0.62, 0.63, 0.64, 0.65, 0.655, 0.657 and 0.66. Inset: the maximum $\chi(t^*)$ as a function of density. The fitting function is a power law $\chi(t^*) = 0.12(0.664 - \rho)^{-0.7}$.

In figure 5 we show the dynamical nonlinear susceptibility for some values of the density. The maximum in the susceptibility $\chi(t^*)$ and the time of the maximum $t^*$ seem to diverge together when the density grows. This has also been found previously in other models such as the $p$-spin model, Lennard-Jones binary mixtures [7] and the annealed version of the frustrated Ising lattice gas model [9]. In our model we obtain that the maximum of $\chi(t^*)$ can be fitted by the power law $\chi(t^*) \propto (\rho_{\max} - \rho)^{-\alpha}$. Here we have $\rho_{\max} = 0.664 \pm 0.002$ and $\alpha = 0.71 \pm 0.02$. The equilibrium value is $\chi(t \to \infty) = \rho^2/2$ for low densities and $\chi(t \to \infty) = 1/2$ for the higher ones.

We next study the self-part of the autocorrelation function of the density fluctuations, defined as

$$F_k^s(t) = \frac{1}{N}\left\langle \sum_i \mathrm{e}^{\mathrm{i}\boldsymbol{k}(\boldsymbol{r}_i(t'+t) - \boldsymbol{r}_i(t'))} \right\rangle \tag{10}$$

where $\boldsymbol{r}_i(t)$ is the position of the $i$th particle in units of the lattice constant. The wavevector can take the values $\boldsymbol{k} = (2\pi/L)\boldsymbol{n}$, where $\boldsymbol{n}$ has integer components $n_x$ and $n_y$ ranging from 0 to $L/2$.

Figure 6(a) shows $F_k^s(t)$ corresponding to $k_x = \pi$ and $k_y = 0$ for different densities. For all densities the whole time interval of the autocorrelation function can be fitted by a stretched exponential function, $f(t) = \exp[-(t/\tau)^\beta]$, where the exponent $\beta$ depends on the density. In figure 6(b) we show $\beta$ as a function of the density. We can see that the exponent $\beta$ decreases with density until a density near $\rho \approx \rho_c$ is reached. From this density the exponent becomes constant, $\beta \approx 0.82$ (within the error bars). At densities near $\rho_{\max}$ finite-size effects become important because the correlation length diverges at $\rho_{\max}$, and $\beta$ deviates from the constant value. As in the $\alpha$-relaxation of the self-overlap parameter, the effect of the percolation on the relaxation of $F_k^s(t)$ is to leave $\beta$ constant, but now there is no two-step relaxation process.

We thus observe different behaviours for the orientational and the translational relaxation. In the orientational relaxation, rotations of the particles in frozen domains are allowed ($\beta$-relaxation) and the $\alpha$-relaxation begins when frozen domains evolve. This results in a two-step relaxation of the self-overlap parameter. For the translational relaxation, on the

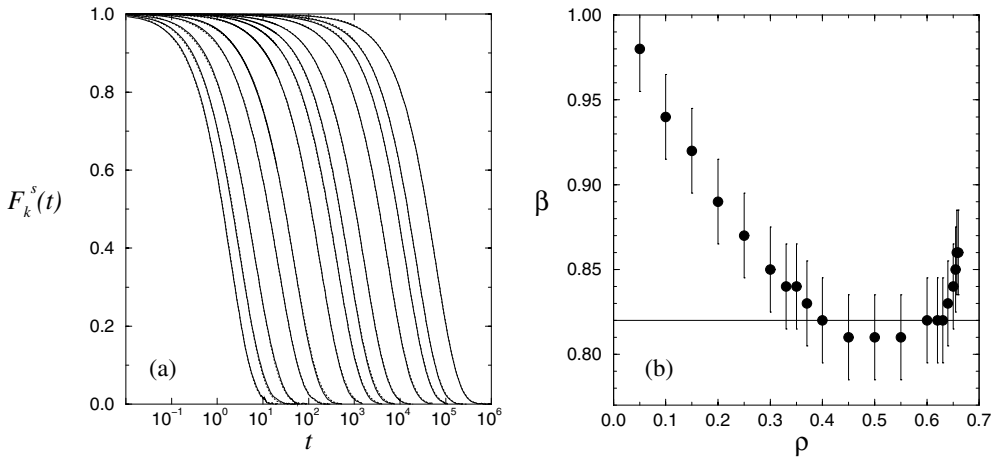


**Figure 6.** (a) Relaxation functions for the self-part of the density–density autocorrelation function for $k_x = \pi$ and $k_y = 0$ and the same system size and densities as figure 3. Dotted curves are fitting functions corresponding to stretched exponential functions. (b) Parameter $\beta$ as a function of the density, obtained by fitting $F_k^s(t)$ for $k_x = \pi$ and $k_y = 0$ with the function $f(t) = \exp\left[-(t/\tau)^\beta\right]$. The solid line corresponds to $\beta = 0.82$.

other hand, vibrations in a frozen environment are not allowed and the relaxation is due to the evolution of frozen domains ($\alpha$-relaxation), which leads to the one-step relaxation of the correlation function (10).

The relaxation time $\tau$ is obtained from the fit of $F_k^s(t)$ with a stretched exponential function, and can be fitted by a power law $\tau \propto (\rho_{\max} - \rho)^{-\gamma}$, with $\gamma = 2.70 \pm 0.02$ and $\rho_{\max} = 0.666 \pm 0.003$. Note that the value of $\gamma$ coincides within the errors with that deduced from the exponents $a$ and $b$ in the fit of figure 4(b); using the relation (4) predicted by MCT, this value is $\gamma = 2.74 \pm 0.03$.

We have also calculated the diffusion coefficient from the behaviour of the mean-square displacement $\langle \Delta r(t)^2 \rangle$ at very long times. The values obtained for $D$ are well fitted by a power law near $\rho_{\max}$, $D \propto (\rho_{\max} - \rho)^\gamma$ with $\gamma = 2.70 \pm 0.02$ and $\rho_{\max} = 0.666 \pm 0.003$. This singular behaviour of $D$ is in accordance with the prediction of MCT. From the behaviour of $D$ and $\tau$ we arrive at $D^{-1} \propto \tau$ and thus the Stokes–Einstein relation $D^{-1} \propto \eta$ (due to $\tau \propto \eta$), where $\eta$ is the viscosity.

## 6. Conclusions

We have proposed a two-dimensional geometric model, based on the concept of geometric frustration which is generated by the particle shape. This model has neither quenched disorder nor kinetic constraints. Percolation in the model has been studied, and we found that at the critical density of arm percolation the model shows a dynamical crossover, characterized by the onset of a two-step relaxation in the orientational relaxation of the particles. Below the transition, the long-time regime of orientational and positional relaxation functions can be fitted by a stretched exponential with an exponent $\beta$ that is constant within the errors. The dynamical results have been compared with the prediction of MCT, finding good agreement. A self-overlap parameter has been defined, which takes into account the orientation of particles, and the corresponding dynamical nonlinear susceptibility has been studied. It has been found that this dynamical susceptibility shows a peak at some characteristic time, which gives evidence

of long-lived dynamical structures with a growing length and relaxation time, as found in some molecular dynamics simulations.

## Acknowledgments

This work was supported in part by the European TMR Network-Fractals (contract no FMRXCT980183), MURST-PRIN-2000 and INFMPRA(HOP). We acknowledge the allocation of computer resources from INFM Progetto Calcolo Parallelo. AD-S acknowledges support from a postdoctoral grant from the European TMR Network-Fractals.

## References

[1] Kohlrausch R 1854 *Ann. Phys., Lpz.* **91** 179
Williams G and Watts D C 1970 *Trans. Faraday Soc.* **66** 80
[2] Randeria M, Sethna J P and Palmer R G 1985 *Phys. Rev. Lett.* **54** 1321
Cesi F, Maes C and Martinelli f 1997 *Commun. Math. Phys.* **188** 135
Franzese G and Coniglio A 1998 *Phys. Rev.* E **58** 2753
[3] Fierro A, de Candia A and Coniglio A 1997 *Phys. Rev.* E **56** 4990
[4] Fortuin C M and Kasteleyn P W 1972 *Physica* **57** 536
Coniglio A and Klein W 1980 *J. Phys. A: Math. Gen.* **12** 2775
[5] Fierro A, Franzese G, de Candia A and Coniglio A 1999 *Phys. Rev.* E **59** 60
[6] Doliwa B and Heuer A 1998 *Phys. Rev. Lett.* **80** 4915
Donati C, Glotzer S C and Poole P H 1999 *Phys. Rev. Lett.* **82** 5064
Benneman C, Donati C, Baschnagel J and Glotzer S C 1999 *Nature* **399** 246
[7] Donati C, Franz S, Parisi G and Glotzer S C 1999 *Preprint* cond-mat/9905433
[8] Coniglio A 1994 *Nuovo Cimento* D **16** 1027
Coniglio A 1997 *Proc. Int. School of Physics 'Enrico Fermi' (Course CXXXIV)* (Amsterdam: IOS Press)
Nicodemi M and Coniglio A 1998 *Phys. Rev.* E **57** R39
[9] Fierro A, de Candia A and Coniglio A 2000 *Phys. Rev.* E **62** 7715
[10] Gaunt D S and Fisher M E 1966 *J. Chem. Phys.* **45** 2482
Ertel W, Froböse K and Jäckle J 1988 *J. Chem. Phys.* **88** 5027
Froböse K 1989 *J. Stat. Phys.* **55** 1285
Jäckle J, Froböse K and Knödler D 1991 *J. Stat. Phys.* **63** 249
[11] Fredrickson G H and Andersen H C 1984 *Phys. Rev. Lett.* **53** 1244
Fredrickson G H and Andersen H C 1985 *J. Chem. Phys.* **83** 5822
Kob W and Andersen H C 1993 *Phys. Rev.* E **48** 4364
[12] Graham I S, Pihé L and Grant M 1997 *Phys. Rev.* E **55** 2132
[13] Caglioti E, Loreto V, Herrmann H J, and Nicodemi M 1997 *Phys. Rev. Lett.* **79** 1575
[14] Gotze W 1991 *Liquids, Freezing and Glass Transition* ed J P Hansen, D Levesque and P Zinn-Justin (Amsterdam: Elsevier)
Gotze W and Sjogren L 1992 *Rep. Prog. Phys.* **55** 241
Franosch T, Fuchs M, Gotze W, Mayr M R and Singh A P 1997 *Phys. Rev.* E **55** 7153
Fuchs M, Gotze W and Mayr M R 1998 *Phys. Rev.* E **58** 3384
[15] Stauffer D and Aharoni A 1994 *Introduction to Percolation Theory* (London: Taylor and Francis)